SINGLE-PHASE AUTOMATIC REACTIVE COMPENSATOR

TRANSFORMER TYPE | BY STEPS

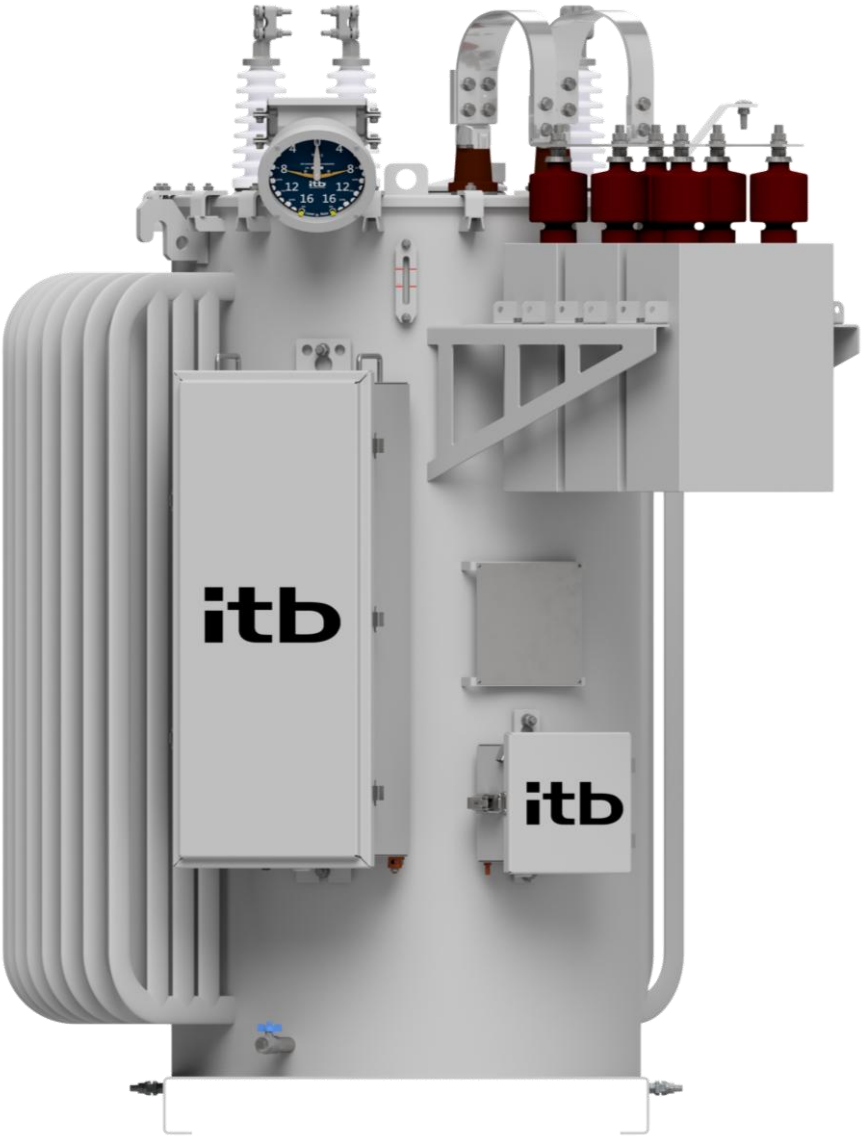

INSTRUCTION MANUAL

MIX-001 | EN

REV202509

EQUIPAMENTOS ELÉTRICOS

INDEX

SAFETY AND THE IMPORTANCE OF LIFE 1

SAFETY INFORMATION 1

General Safety Instructions 2

INTRODUCTION 3

ADDITIONAL INFORMATION 3

INTEGRATED MANAGEMENT POLICY 3

RECEIPT 3

UNLOADING, STORAGE AND TRANSPORT 3

REACTIVE COMPENSATOR – OVERVIEW 5

Standard items 5
Optional items 6
Automatic Reagent Compensator – External Features 6
Identification of line terminals 8

DESCRIPTION – MAIN ACCESSORIES 9

Auxiliary junction box 9
External Mechanical Position Indicator Model TCPI-1 13

INSTALLATION AND OPERATION 15

Nameplate 15
Rated power as a function of altitude 16
Pre-Installation Inspections 17
Possibilities for system connections 18
Ground on compensator bank 20
Fuses 20
Cascading Compensator Bank 21
Line terminal connections 21
Putting it into operation 21
Verifying Operation and Compensation 22
Withdrawing from operation 23

CONSTRUCTION DETAILS AND CONNECTIONS 24

Winding Connection Diagram 24
Internal arrangement of components 24
Standardized internal wiring diagram 26
Windings 26
Switches ..... **Erro! Indicador não definido.**

PREVENTIVE MAINTENANCE 27

Periodic inspections and maintenance 27
Removing the active part of the tank 30

Replacing the active part in the tank....31
Load changer....31
SPARE PARTS FOR REPLACEMENT 34
Life cycle....34
Insulating oil – MSDS....34

SAFETY AND THE IMPORTANCE OF LIFE

ITB, as a manufacturer of electrical equipment, takes all measures to ensure the safety of people who may be in contact with its products, of other equipment that may be connected to them and of the environment where they are installed.

Our main references to ensure these levels of safety are the official standards that represent accumulated experiences in various different conditions and for enough time to be adopted as good practices of operational, contingent and effectiveness safety.

We consider it our obligation to actively promote conscious and safe practices, both in the choice of the most suitable equipment for each application, as well as in its correct handling and proper maintenance, as well as we understand that disseminating the knowledge involved, through technical service literature and training programs, constitute the most efficient means of continuous improvement of both our products and services and the set of these good practices.

We recommend observing all safety procedures stipulated by local regulations, approved, instituted and required, as well as the use of all safety equipment, individual or global, recommended for activities around equipment and high voltage lines.

SAFETY INFORMATION

The instructions contained in this manual are not intended to replace the proper training and accumulation of experience required in the installation, maneuvering, and safe operation of the single-phase reactive compensator. Only competent technicians who are familiar with network equipment should install, operate, and maintain it.

A technician competent for such functions must have the following qualifications:

- Be familiar with these instructions;
- Be trained in safe operation, procedures and practice accepted by the high and low voltage industry;
- Be trained according to regulatory standards and authorized to energize, de-energize and handle power distribution equipment.
- Be trained on the proper care and use of personal protective equipment, such as: FR clothing, goggles, visors, helmets, rubber gloves, maneuvering rods, etc.;
- Be trained for the installation and use of stairs on poles, necessary signage on public roads and allusive legislation.

For installation and operation of this equipment, be sure to read and understand all NOTICEs and NOTICEs.

This manual contains three types of NOTICE phrases:



DANGER: Indicates an imminently hazardous situation which, if not avoided, will result in death or injury of any kind to the operator or persons near the network or equipment.



CAUTION: Indicates a potentially critical situation that, if not avoided, could result in operational damage to the equipment, the network, or its surroundings.



NOTICE: Indicates a potentially unwanted situation which, if not avoided, could result in equipment malfunction.

General Safety Instructions

In general, we suggest taking into account the following information when installing, operating, maintaining, or maneuvering devices installed in high-voltage networks:



DANGER: Dangerous voltage. Contact with high voltage will cause death or very serious injury. Follow all approved safety procedures when working around high-voltage lines and equipment.



NOTICE: Before installing, operating, maintaining, or testing the equipment, carefully read and understand the contents of this manual. Improper operation, use, or maintenance may result in damage to the equipment or the network on which it is installed.



DANGER: Power distribution equipment must be properly selected for the intended application. They must be installed and maintained by competent personnel who are trained and aware of proper safety procedures. These instructions are written for such persons and are not a substitute for adequate formal training or experience in safety procedures. Failure to properly choose, install, configure, and maintain electrical power distribution equipment can result in death, serious bodily injury, and equipment damage.

INTRODUCTION

This manual is intended to provide instructions for installation, operation, and maintenance of ITB reactive compensators, model CAQ-1.



NOTICE: Reading this manual completely will assist in proper installation, safe handling, efficient operation of the equipment, and maintenance of the equipment in a safe and reliable manner.

ADDITIONAL INFORMATION

This manual does not aim to cover all the details or variations of the equipment and their respective control systems, procedures or processes in general, nor to provide guidance on all the practices required for installation, operation and maintenance. If you need more information, contact a technical representative of ITB Equipamentos Elétricos Ltda.

INTEGRATED MANAGEMENT POLICY

Our high standards of quality, environmental preservation and personal well-being are endorsed by ISO 9001 Quality Management System, ISO 14001 Environmental Management System and OSHAS 18001 Occupational Health and Safety Management System.

RECEIPT

Before packing, the compensator is tested and inspected at the factory. Upon receiving it, another inspection should be done to locate damage that may result from transport. The external position indicator, control box, lightning rods, radiators, bushings, electrical cables and other external components must be rigidly fixed to the compensator body, intact and free of cracks and deformations. The packaging must also show no signs of tampering, impact, or falling.

Any irregularity found, even before proceeding with the unloading, immediately notify the representative or the after-sales department of ITB Equipamentos Elétricos Ltda.

UNLOADING, STORAGE AND TRANSPORT

Any and all handling of the equipment must be carried out carefully by qualified personnel and with the appropriate protections. The compensator must not be hoisted over people and objects.

The compensator must be lifted in a level manner, with cables or chains and by means of the suspension straps fixed to the side of the tank.

Do not use the suspension eyes installed on the equipment cover to lift the complete compensator. These eyelets are only intended for removal of the active part that is attached to the lid.

CAUTION: DO NOT USE the lid eyelets to lift the complete equipment. The cover can break, causing damage to equipment, serious bodily injury, and even death.

The cable or chain to be used must be intact, have the capacity to support the weight of the compensator and be of sufficient length so that the angle formed between each cable run, with the apex on the hook, is at most 60º, as presented by the Figure 1.

Figure 1: Method of total suspension.

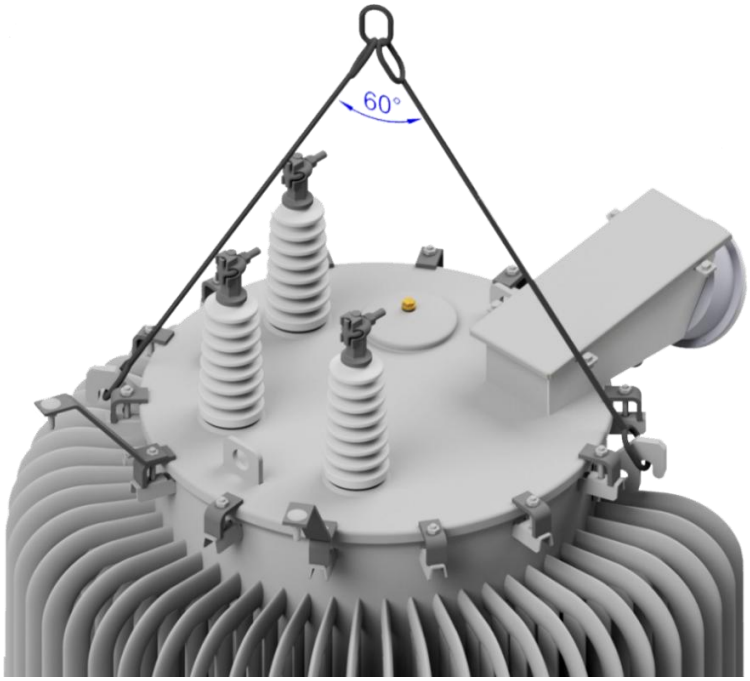

CAUTION: The use of cables, straps or chains that are too short, which provide angles greater than 60º, will cause permanent deformation in the compensator tank and rupture of the lifting handles, causing damage to the equipment, serious bodily injury and even death.

If the compensator is temporarily discharged, the equipment should be stored, preferably its original packaging, in a ventilated place, with a level floor, away from heat sources, protected from sparks and where there is no possibility of mechanical damage.

When transporting the compensator to the installation site, in order to maintain the product warranty, preventive measures must be taken to avoid constant shocks and sudden movements. It is necessary to ensure that the equipment is well attached to the transport vehicle and that the speeds of this vehicle are limited as Table 1.

Table 1: Transport speed limit values.

Type of Transport Route	Maximum Recommended Speed [km/h]
Paved	80
Unpaved	40



NOTICE: It is recommended that the transport vehicle has a tachograph installed to control the maximum transport speed.

REACTIVE COMPENSATOR – OVERVIEW

The Automatic Reactive Power Compensator CAQ-1, from ITB Equipamentos Elétricos Ltda., was developed to perform the correction of the power factor in distribution and/or voltage regulation systems, by adjusting the reactive load injected into the electrical network.

Its operation is based on the measurement of the reactive power consumed in the phase in which it is installed, gradually providing the necessary compensation — from zero to the capacitive maximum and/or from zero to the inductive maximum, according to demand.

To do this, the CAQ-1 uses a single-phase coupling transformer, equipped with 17 switchable leads under load, which apply 17 different voltage levels to a reactive element (capacitor or inductor). These levels are distributed over 16 equal voltage steps, allowing effective and precise control of the reactive power supplied to the grid.

The switching of the reactive load on the secondary of the coupling transformer is carried out by a mechanical changeover with arc-in-oil extinguishing and reactor transition, using the same technology as single-phase stepped voltage regulators.

Voltage and current sensors provide the CTR-3X digital control with the data it needs to set the reactive compensation. This control triggers and monitors the tap switch, ensuring proper correction.

All ITB compensators are delivered with factory default settings and can be configured as required by the application.

Standard items

The compensators are arranged in unitary construction and have the following standard features:

- Base with drilling for installation on platform;
- Terminal block over the cover;
- Bushings suitable for nominal voltage and current level;
- Load-loaded changer suitable for rated voltage and current levels;
- ABNT® or IEEETM grounding connector;
- Top connection for filter press and thermovacuum (1.1/2" thread);
- Sealed tank construction;
- Three-phase control, model CTR-3X, from ITB Equipamentos Elétricos Ltda.;
- Compensator full suspension hooks;
- Oil level indicator with nominal and minimum marking;
- Hanging eyes of the active part;

- Stainless steel nameplate;
- Filled with type II insulating mineral oil, in accordance with ASTM D3487;
- ABNT® or IEEETM pole mounting bracket (for compensators with mass ≤1,500 kg);
- Manhole cover;
- Internal pressure relief valve;
- Support for fuse switch on the FC terminal;
- Drain valve with device for collecting oil sample.

Optional items

Due to the most diverse technical specifications met by ITB Equipamentos Elétricos Ltda., optionally, the following characteristics can be met:

- 2-10 meter shielded control cable (1 meter pitch);
- Control cable with quick disconnect from 2 to 10 meters (1 meter step);
- 2-10 meter control cable (1 meter pitch);
- Stainless steel control box;
- NEMA type bushing connectors;
- Alternative finish colors;
- Oil level indicator with alarms;
- Analog external position indicator, model TCPI-1, from ITB Equipamentos Elétricos Ltda.;
- Vacuum and pressure gauge;
- Oil of vegetable origin;
- Stainless steel external screws;
- Fuse switch for FC terminal;
- Bushing protectors;
- Control box heating system;
- Oil top thermometer with or without alarms;
- Internal pressure relief valve with alarm.

Automatic Reagent Compensator – External Features

With a simple and intuitive design, for easy installation and maintenance, the reactive compensator has all the fundamental components for its proper operation. The location and description of each of these components can be seen in the

Figure 2 and Table 2.



NOTICE: The following breakdown is not intended to cover all possibilities for external construction of a reactive compensator. Details intrinsic to each project should be consulted during the technical feasibility analysis and purchase order approval phase.



NOTICE: For more details on the controls for reactive compensators manufactured by ITB Equipamentos Elétricos, visit our website and download the latest versions of the instruction manuals.

Figure 2: External components of the CAQ-1 compensator.

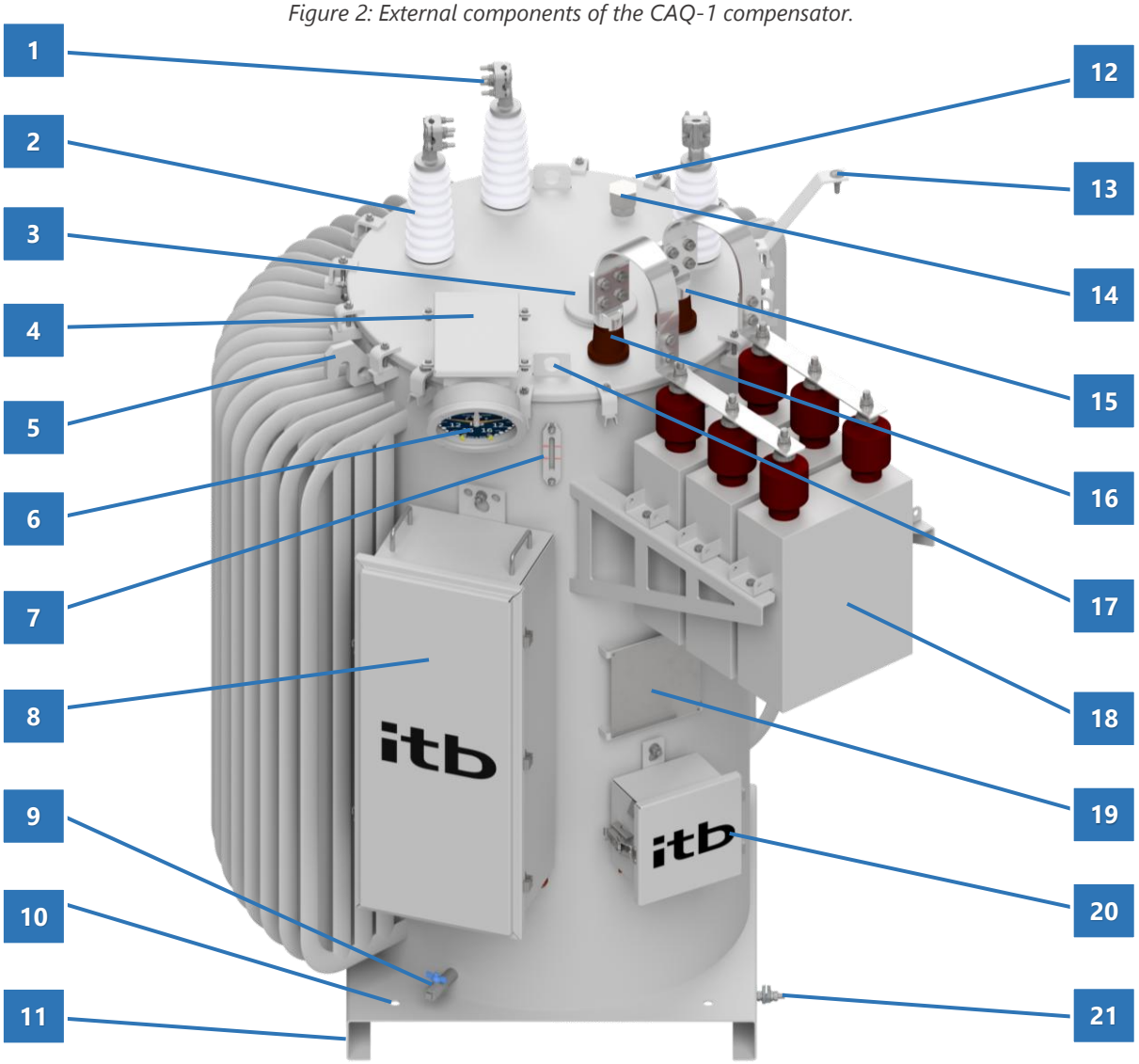

Table 2: External components CAQ-1 compensator.

Item	Description
1	Line connectors
2	Isolator
3	Manhole cover
4	Terminal Block Box
5	Compensator full suspension hook
6	External Mechanical Position Indicator Model TCPI-1
7	Oil level indicator with nominal and minimum marking
8	CTR-3X Control Box
9	Drain valve with oil sampling device
10	Provision of 4 round holes with a diameter of 20mm for fixing the base to the platform
11	Base with drilling for installation on a platform
12	Internal pressure relief valve (rear of compensator tank)
13	Fuse switch holder

Item	Description
14	1.1/2" sleeve with CAP for tank filling
15	X1 - Terminal for feeding the reactive element - Phase
16	X2 – Terminal for feeding the reactive element - Neutral
17	Active part hanging eyes
18	Reactive element
19	Stainless Steel Nameplate
20	Auxiliary feed-through box for connecting the CTR-3X control
21	ABNT grounding connector

Identification of line terminals

The identification of the line terminals of the reactive compensators is in low relief on the cover, reinforced with paint.

Figure 3: ABNT® Nomenclature.

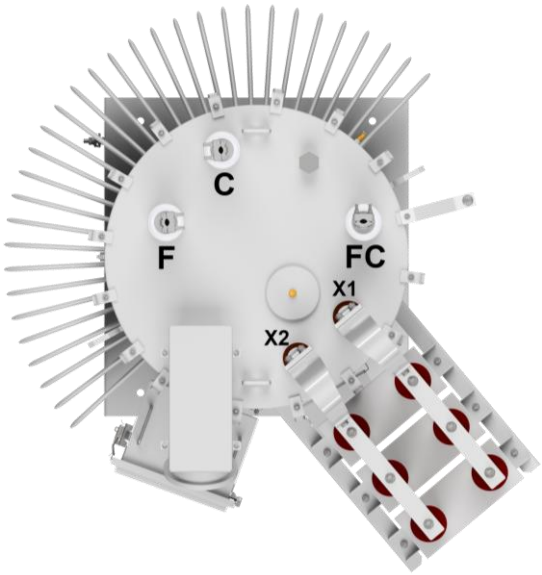

Figure 4: IEEE Nomenclature ™.

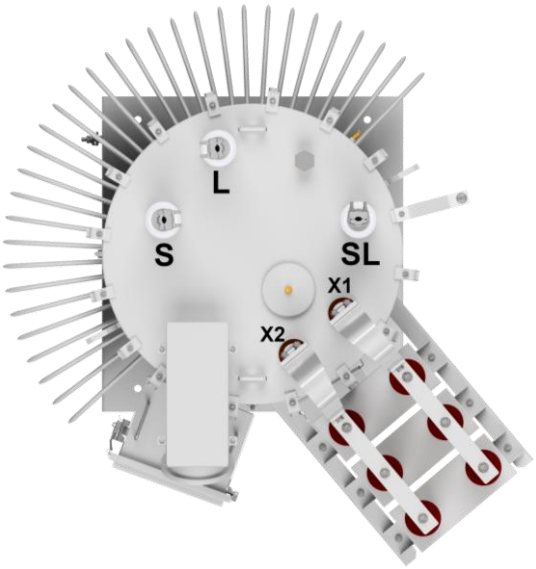

The terminal connected to the system source is identified by the letter F (source), or S (*source*), and is positioned to the left of the compensator, when viewed from above. The terminal connected to the system load is identified by the letter C (load), or L (*load*), and is positioned in the center of the compensator. The common terminal that is connected to the reference is designated by the letter FC (source-load) or SL (*source-load*), and is positioned to the right of the compensator. The X1 terminal, located at the bottom right of the compensator, corresponds to the phase of the reactive element, while the X2 terminal, located to the left of X1, is responsible for connecting the neutral to the reactive element.

DESCRIPTION – MAIN ACCESSORIES

For the operation of the reactive compensators to be full and safe, some accessories are necessary. These accessories are described below:

Auxiliary enclousure

The feed-through aid box is supplied as standard for use with the CTR3-X control and is an integral part of the system. This component is responsible for the interface between the reactive compensator and the control system.

All the components of this box are housed in a metal cubicle, made of carbon steel and coated with a liquid or powder coating system, in light gray, MUNSELL notation N. 6.5, or in accordance with the standard paint of the reactive compensator.

On request, or according to the customer's technical specification, it is possible to change the finishing system and material of the casing.

The box has fixing straps for mounting on the compensator body and, if necessary, can also be used to fix the box on the pole. The dimensions and details of the handles are illustrated by the Figure 5.

Figure 5: External dimension of the auxiliary passage box.

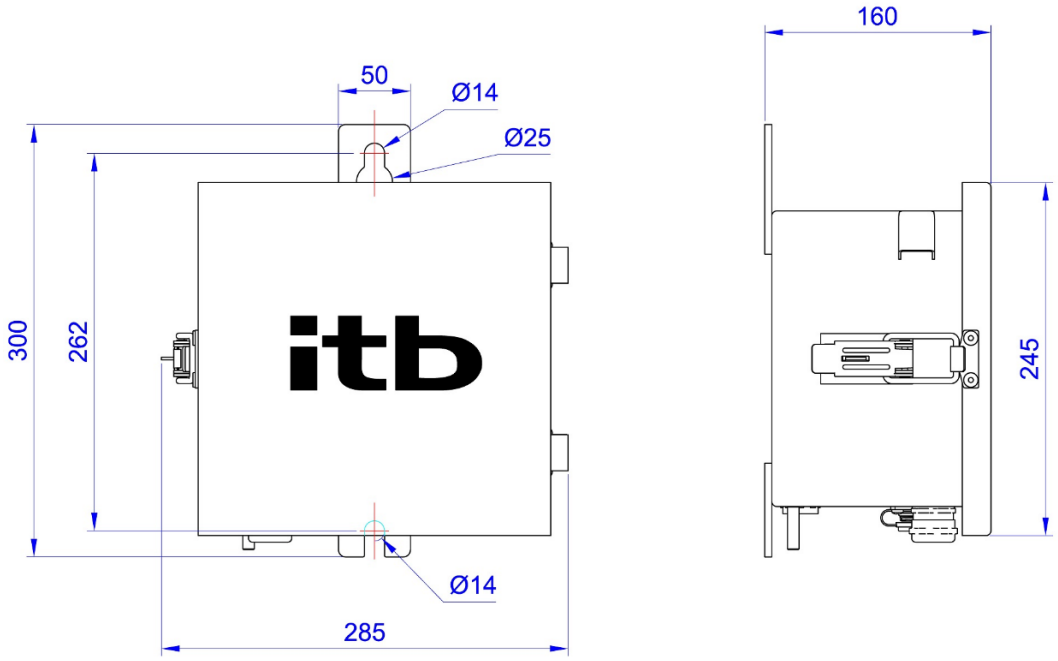

The auxiliary junction box has the following features:

- Capacitor do motor (20 µF / 400 V);
- Reciprocating motor drive switch;
- Knife-type switch to short-circuit the CT, ensuring safe withdrawal from the control system;
- 6-digit electromechanical cumulative operation counter;
- Devices for protecting the motor actuation signals;
- Additional input for external TP and CT signal;
- IK9 degree of protection against external mechanical impacts;
- IP54 degree of protection prepared to work over time;

- Printed circuit board with spring terminals for input and output and signals;
- M8 threaded terminal for grounding;
- Connection terminal for selection of primary voltage;
- Standardized 18-way male circular socket.

Internal components

The auxiliary junction box has components necessary for the broad standardized interface between the control system and the reactive compensator, the location and description of each of these can be seen in the Figure 6 and Table 3.

Figure 6: Internal components to the auxiliary passage box.

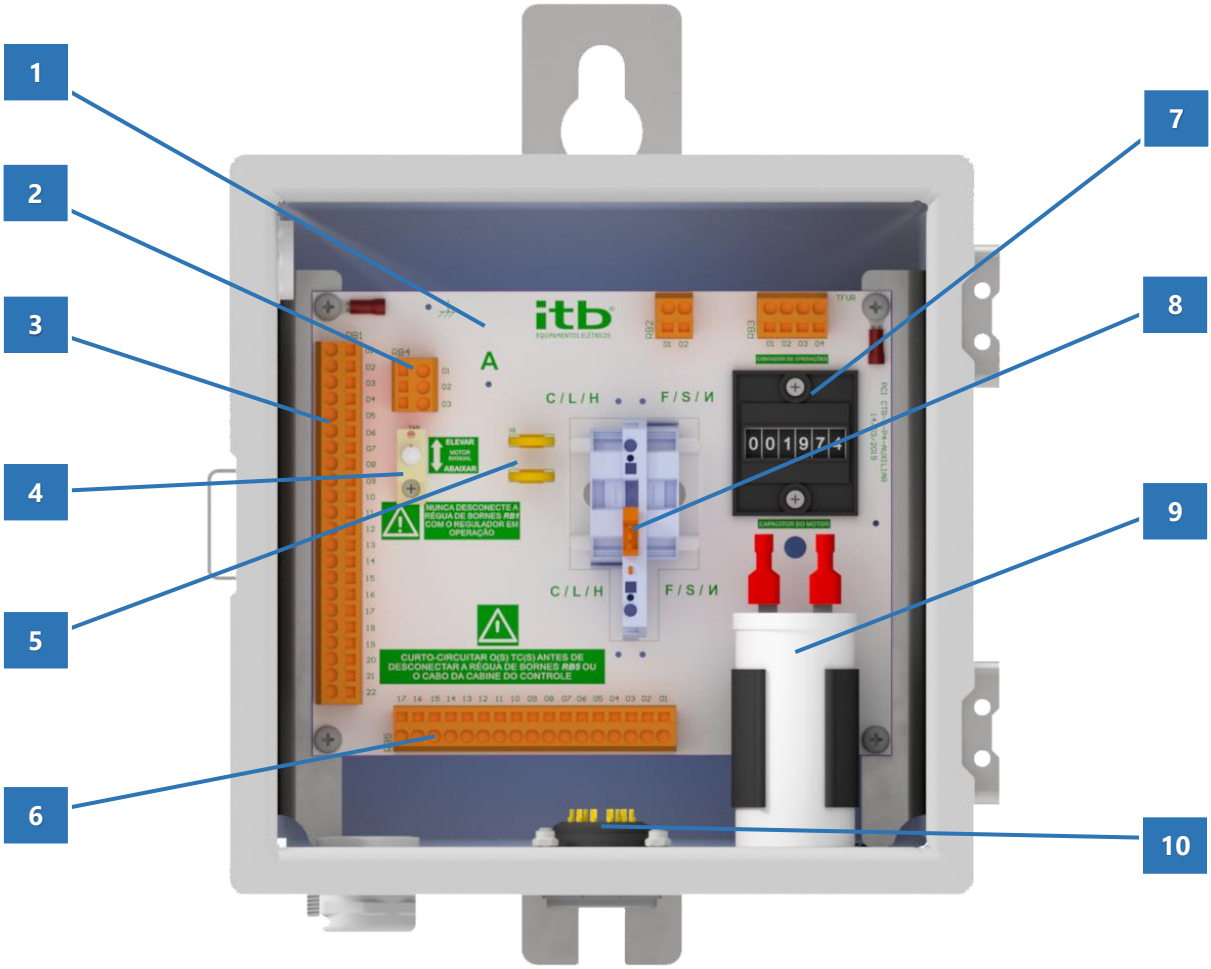

Table 3: Internal components to the auxiliary box.

Item	Description
1	PCI PCB Circuit Board *CTR-3 - P4 - AUXILIARY*
2	Connection terminal for selecting the primary voltage (washer A)[1]
3	Reactive compensator signals input terminal
4	Reciprocating motor drive switch
5	Devices for protecting motor actuation signals
6	Reactive compensator signal output terminal for standard male circular socket
7	6-digit electromechanical accumulative operation counter
8	Wrench, knife type, to short circuit the TC secondary
9	Capacitor do motor (20 µF / 400 V)
10	18-way male circular standard socket

Standardized interface

The connection between the chosen control system and the auxiliary junction box of the reactive compensator is made through a standardized interface, according to item 10 of the Table 3. This interface has standardized signals, which meet the most diverse technical specifications of the market, as Table 4.

Table 4: Standardized pins for interfacing.

Pins	Description
1	Neutral (grounded)
2	Operations counter
3	Neutral Light
4	Current Measurement Phase
5	Voltage measurement phase
6	Motor drive to lift
7	Lowering the motor
8	Reset the position indicator
9	Motor Retention
10	- No connection -
11	- No connection -
12	Bit 0 for reading the *encoder*
13	Bit 1 for reading the *encoder*
14	Bit 2 for reading the *encoder*
15	Bit 3 for reading the *encoder*
16	Bit 4 for reading the *encoder*
17	- No connection -
18	- No connection -

[1] *For more information on adjusting the primer voltage, see section:* ***Adjusting the Primary Voltage****.*

CAUTION: The CAQ-1 is designed exclusively to operate with the CTR-3X control. The use of controls from other manufacturers is not recommended, as the equipment was designed considering the electrical, functional and communication characteristics of the CTR-3X, which ensures its correct operation and expected performance.

The interface fixed in the auxiliary box is of the type male circular socket with 18 ways. The interface that must be connected to the auxiliary box must be of the 18-way female circular socket type, as illustrated in the Figure 7.

Figure 7: 18-way female circular plug.



Reciprocating motor drive

The alternative motor activation switch is located on the printed circuit board called PCI CTR-3 - P4 – AUXILIARY, and in the TAP position, according to item 4 of the Table 3

This switch allows the operation of raising or lowering the position of the switch only with the presence of a control system connected to the auxiliary box.

The switch is of the momentary type of 3 positions, one normally turned off and the ones that activate the motor to raise and lower, according to the direction indicated in the serigraphy *of the PCI CTR-3 - P4 - AUXILIARY*.

DANGER: DO NOT OPERATE this function on reactive compensators without an external mechanical position indicator.

DANGER: The reciprocating motor must be operated with care, as there are several energized points inside the auxiliary box.

CT short circuit

To avoid overvoltage in the CT secondary, it is necessary to short-circuit the current signal before removing the chosen control system. This operation must be carried out using a knife-type key fixed on the printed circuit board called *PCI CTR-3 - P4 – AUXILIARY*, inside the auxiliary junction box. The Figure 8 illustrates this procedure.

Figure 8: Procedure for short-circuiting the CT.

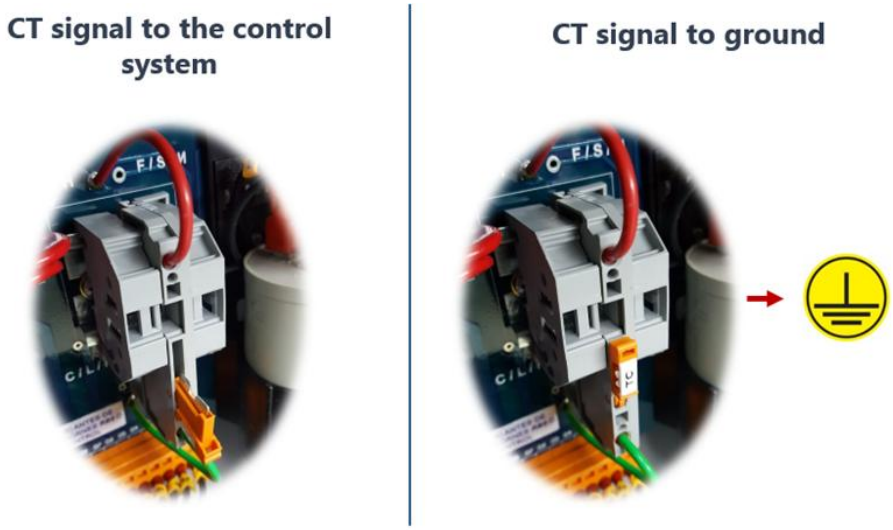

CAUTION: DO NOT REMOVE the connector from the standard circular outlet without first short-circuiting the CT. The CT circuit MUST be short-circuited when the control system is removed. Failure to follow these instructions will result in damage to the equipment.

External Mechanical Position Indicator Model TCPI-1

The external mechanical position indicator, model TCPI-1 for CAQ-1 reactive compensators from ITB Equipamentos Elétricos Ltda., is a device that allows obtaining the positioning information of the changer in real time, through its connection by means of a flexible shaft directly connected to the mechanism of the changer under load.

It is fixed to the compensator cover and has an inclination that makes it visible from the ground. The TCPI-1 has a display graduated in 16 steps to raise, 16 steps to lower and neutral position, the steps have indications only for the even tapes. In this case, the compensator will only work in the positive step range, i.e. from 0 to +16. The indicator has negative indications as it is the same used in the voltage regulator.

This display is simultaneously capable of indicating the current, maximum and minimum position reached during the operation of the compensator. The indicator hands of the maximum and minimum positions are of the drag type, for their reestablishment (*reset*) the corresponding button must be used in the chosen control system.

The TCPI-1 indicator is equipped with limit switches that allow you to control the limit of the operating range for the sides of lift (*raise*) and lower (*lower*). The location and description of each of these keys and the other TCPI-1 items can be seen in the Figure 9 and Table 5.

Figure 9: TCPI-1 indicator.

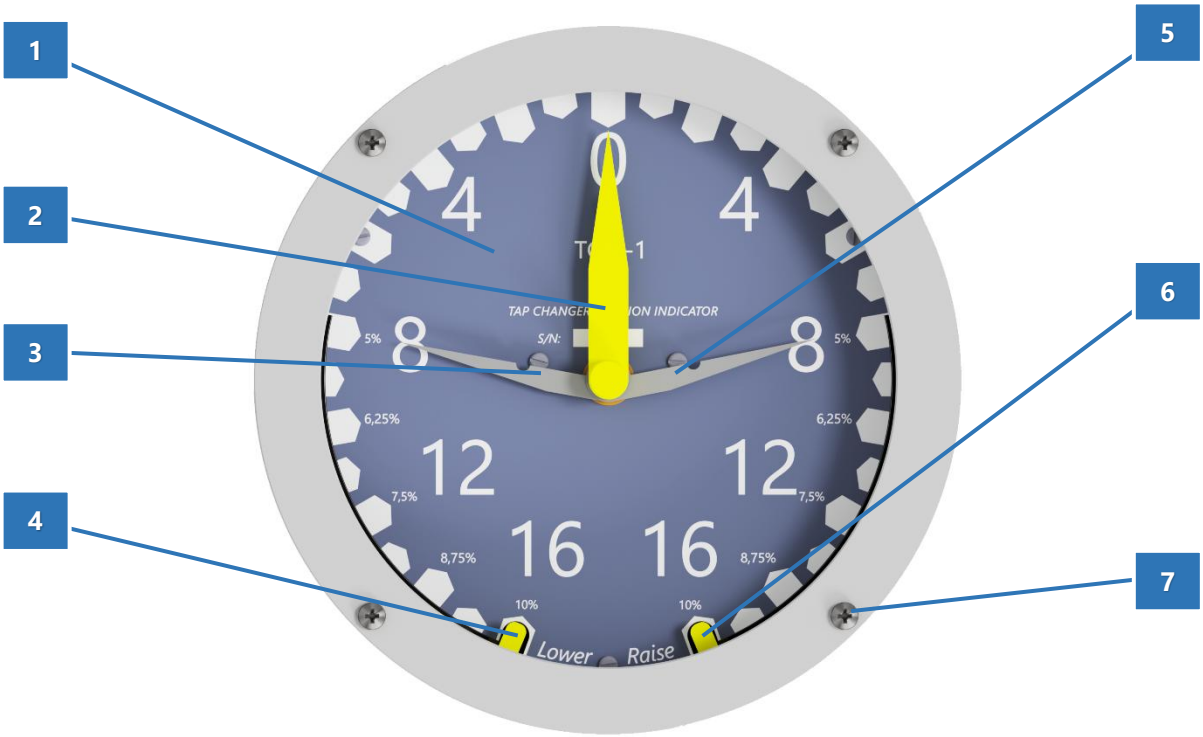

Table 5: Components of the TCPI-1 indicator.

Item	Description
1	Graduated display with position indication
2	Current position indicator pointer
3	Indicated Minimum Position Pointer
4	Minimum position limit switch adjustment lever (lowering direction)
5	Maximum position indicator pointer
6	Maximum position limit switch adjustment lever (elevate direction)
7	Screw for removal of the front panel and access to the adjustment levers

NOTICE: NEVER HANDLE THE POINTER INDICATING THE CURRENT POSITION.

NOTE: The CAQ-1 does not use the lower band, *it only uses* the *raise band*

INSTALLATION AND OPERATION

The following approaches are crucial for the safe installation and operation of the CAQ-1 voltage compensators of ITB Equipamentos Elétricos Ltda.

Nameplate

Before installation and operation, it is essential to read all data from the compensator nameplate. By default, each compensator has a nameplate, made of stainless steel, and fixed over the tank. In Figure 10 A typical model of this board can be seen.

It brings data inherent to the design of the compensator, information necessary for the proper use of the equipment. It also has engraved the serial number, date of manufacture, customer code (if applied) and equity (if applied).

When contacting ITB Equipamentos Elétricos Ltda.'s technical support, always have the serial number at hand, so that our team can consult all the information related to the equipment in question.

Figure 10: Typical nameplate.

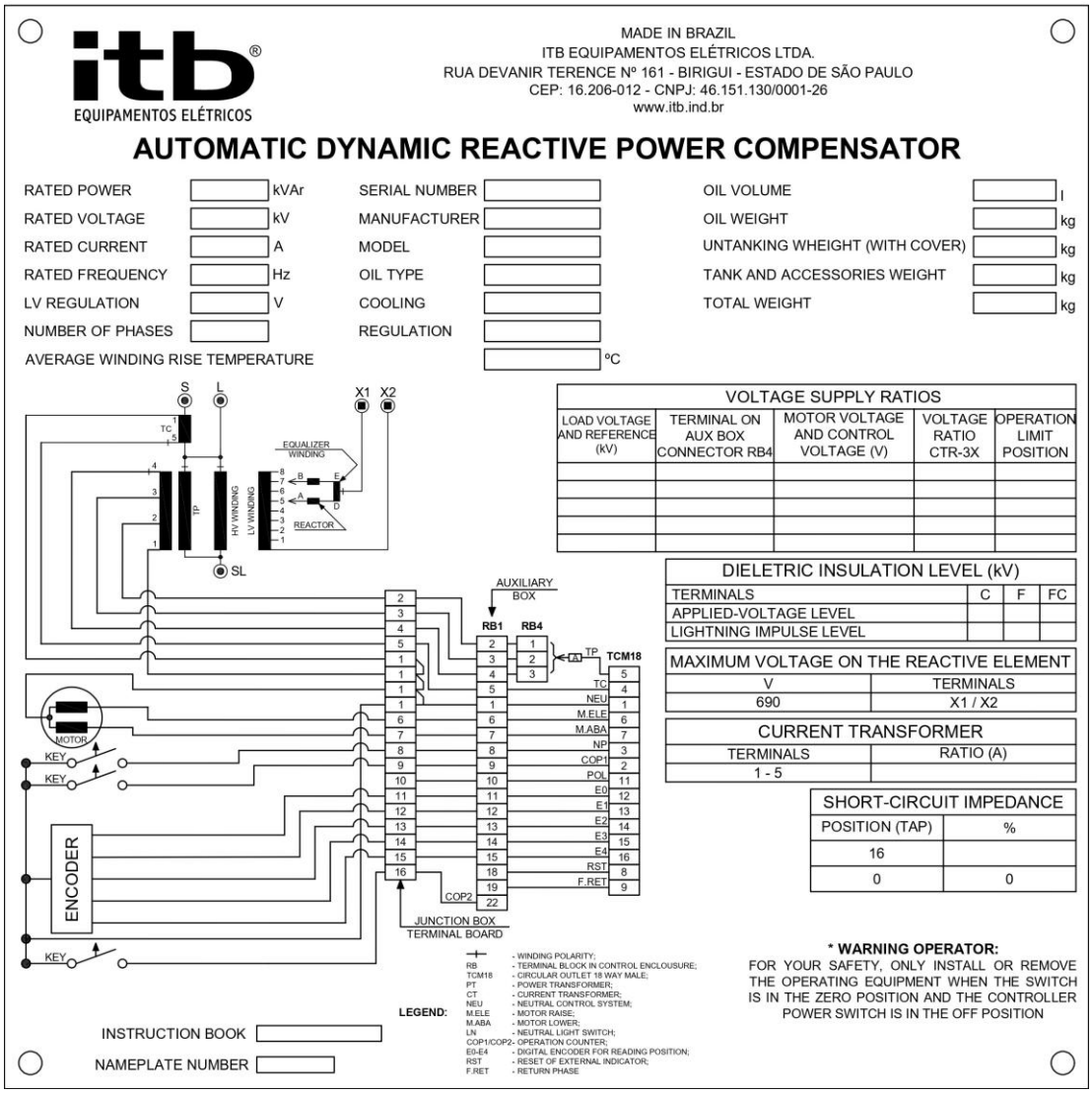

Adjusting the Primary Voltage

On all the identification plates of the CAQ-1 compensators, there is a table entitled *PRIMARY VOLTAGE ADJUSTMENT* that brings several information inherent to the operation of the control.

In the column "*Connection in the RB4 ruler of the auxiliary box*" brings the necessary changes that must be made so that the nominal working voltage of the compensator is compatible with the nominal voltage of the line that will be connected to the compensator.

When the compensator has the auxiliary junction box, the adjustment must be made at the terminal identified with "*A*", which is connected to the *RB4* terminal block, located on the printed circuit board called *PCI CTR-3 - P4 - AUXILIARY*. This adjustment may vary between positions 1, 2 or 3 of the ruler;

To adjust the rated working voltage, proceed with the following steps:

1. Identify the correct position of the reconnection terminals to select the appropriate voltage;
2. Use a terminal screwdriver (1/8") to press the spring of the terminal strips;
3. Proceed with the necessary reconnections;
4. Tighten the screws or release the spring from the terminal blocks. Check out the connections!



DANGER: If the compensator is energized and it is necessary to adjust the "B" *and* "C" *terminals* for the compensating PT, open the "*A*" terminal first to avoid the risk of electric shock. This operation must be carried out carefully, as inside the box there are several energized points.

In the same table, *VOLTAGE ADJUSTMENT ON PRIMARY,* there is a column referring to "Operation limit position " which specifies the maximum position allowed for the switch when the compensator is operating at the indicated voltage. For example, for a compensator with a nominal voltage of 13.8 kV and the possibility of adjustment for additional voltages up to 11.4 kV, the maximum position of the switch will be 13 when connected to 13.8 kV. In the case of operation at 11.4 kV, the maximum position will be 16. This restriction is because the voltage applied to the reactive element cannot exceed 690 V.



DANGER: The operating limit position must be adjusted to ensure that the voltage applied to the reactive element does not exceed the supported value. Incorrect configuration may result in serious failure and irreversible damage to the equipment.

Rated power as a function of altitude

Because of the reduction in air density as a function of the elevation of the altitude of the installation, the temperature increase of the compensators is increased, since they depend on the air to dissipate their losses. For this reason, to maintain the temperature rise limits within the projected, the compensatory installed above 1,000 meters above sea level (msnm) have a reduced nominal power.

To determine the new nominal power value, a reduction factor of 0.4% is used for every 100 meters of elevation over 1,000 meters. **Example:** Compensators with a rated power of 276 kVA and designed for a maximum altitude of 1,000 masl, if installed at 2,000 maslm, will have rated power reduced to 265 kVA, a reduction of 4%.



NOTICE: To avoid a reduction in the rated power of the compensator as a function of altitude, during the process of technical specification of the request for quotation, it is necessary to inform the altitude (in msnm) of installation of the compensators.

Pre-Installation Inspections

Before putting the compensator into operation, proceed with the following inspections:

1. Check if the selected voltage compensator is compatible with the characteristics of the network where it will be installed;
2. Check that the oil level is below the minimum marking. In case of insufficiency, check for visible signs of leakage, if not, promote adequate replacement with compatible oil;
3. Inspect the bushings for damage or signs of leaks in the seals. If seepage is suspected, remove the inspection cap to check for traces of oxidation or water in the oil. Once the infiltration is confirmed, consult ITB Equipamentos Elétricos Ltda. for indication of the appropriate procedure;
4. If the compensator remains in storage for some time, check the dielectric strength of the oil according to IEC® 60156. If the value found is below 55 kV, filter the oil and carry out additional tests to verify its integrity;
5. Examine that there is no damage to the serial lightning rod and its conductors;
6. Check that the markings of the compensator line terminals are in accordance with what is presented in the section*: **Identification of line terminals***;
7. Check the dielectric strength between the bushing terminals and the tank using a 5 kV megometer. The minimum value read should be 1,000 MΩ at room temperature;
8. Check that the position indicator is free of damage and in the neutral position and, if not, proceed with the external supply, functional test at low voltage and placing the switch in the neutral position;
9. Check that the primary voltage setting is suitable for the line voltage that the compensator will work on, as indicated in section: ***Adjusting the Primary Voltage***;
10. Verify that the maximum switch position setting is set as indicated on the trim nameplate;
11. Check that all parameter adjustments are correctly programmed in the chosen control system, according to the pre-established commissioning route.



CAUTION: If it is necessary to dry the active part or subject the oil to heated processes, make sure that the switch does not reach temperatures above 90°C. This can cause damage to the *microswitches* responsible for the switch's signals under load.



NOTICE: Check the CTR-3X control system manual for general details of its functions, settings, and operation.

Possibilities for system connections

The CAQ-1 voltage compensators from ITB Equipamentos Elétricos Ltda. can work in two ways: In star or closed delta. The type of connection of the compensator to the system will be decisive for defining its nominal voltage.



DANGER: Connect the source terminal (F or S) of the trim to the side of the system source, and the load terminal (C or L) of the trim to the side of the system load. For star connections, connect the common terminal (FC or SL) of the compensator to the neutral of the system. For delta connections, connect the common terminal (FC or SL) of the trim to the load terminal (C or L) of the reference trimester. Incorrect connections can lead to equipment damage, serious bodily injury, and even death.



NOTICE: The connection diagrams display individual keys for the *bypass* and disconnect functions. However, *bypass* keys can be used on each compensator to perform simplified sequential operations.



NOTICE: Check the CTR-3X control system manufacturer's manual for general details of its functions, adjustments and operation for the correct handling of power flow in the most diverse possibilities of connections.

Three-phase compensation – Leading Closed Delta

The three-phase, phase-to-phase regulation with three compensators, leading to a closed delta, with three wires, has a connection as shown by the Figure 11 and with the following basic characteristics:

- Rated voltage of the compensator is equal to the rated phase-phase voltage of the system;
- The current is measured in the three phases;
- Lag between voltage and current will be +30º for all compensators;

Figure 11: Three-phase in-line connection – Leading Closed Delta.

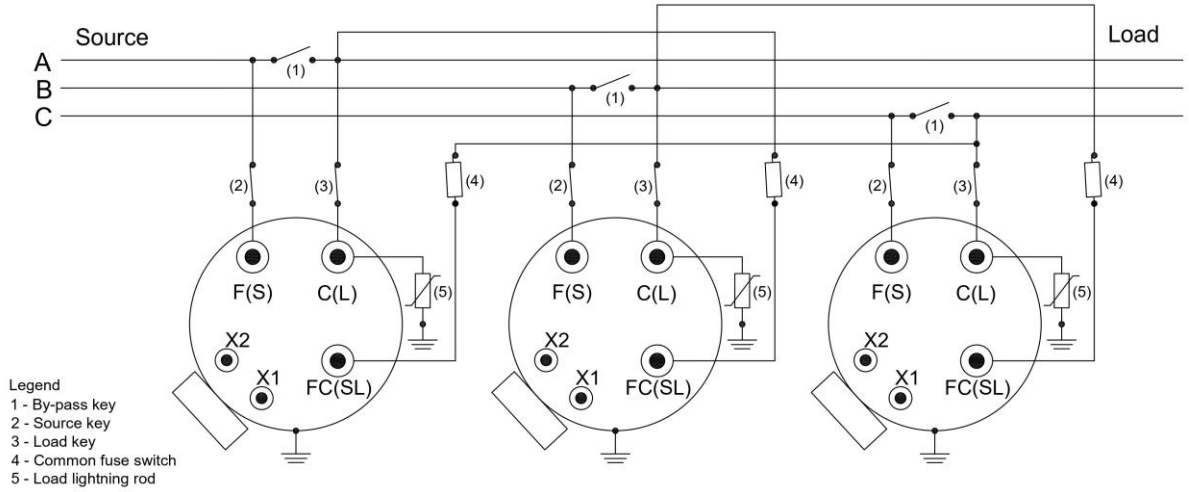

Three-phase compensation – Lagging Closed Delta

Three-phase, phase-to-phase compensation with three compensators, lagging closed delta, three-wire, has connection as displayed by Figure 12 and with the following basic characteristics:

- Rated voltage of the compensator is equal to the rated phase-phase voltage of the system;
- The current is measured in the three phases;
- Lag between voltage and current will be -30º, for all compensators;

Figure 12: Three-phase in-line connection - Late closed Delta.

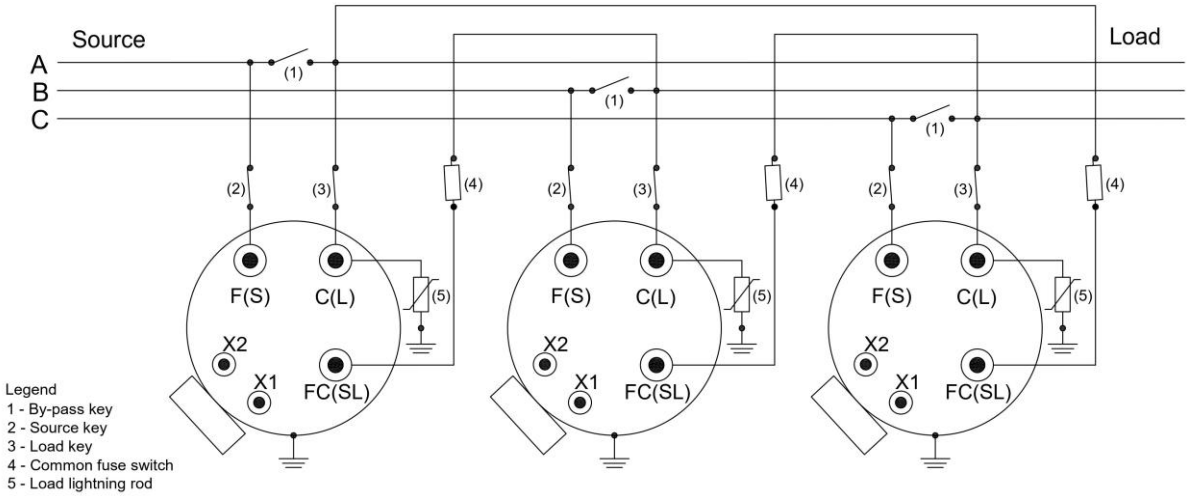

Three-phase regulation – Star

The three-phase, phase-neutral, three-compensator, star, four-wire regulation has a connection as shown by the Figure 13 and with the following basic characteristics:

- Rated voltage of the compensator is equal to the rated phase-neutral voltage of the system;
- The current is measured in the three phases;
- Lag between voltage and current will be 0º for all compensators;

Figure 13: Three-phase online connection - Star.

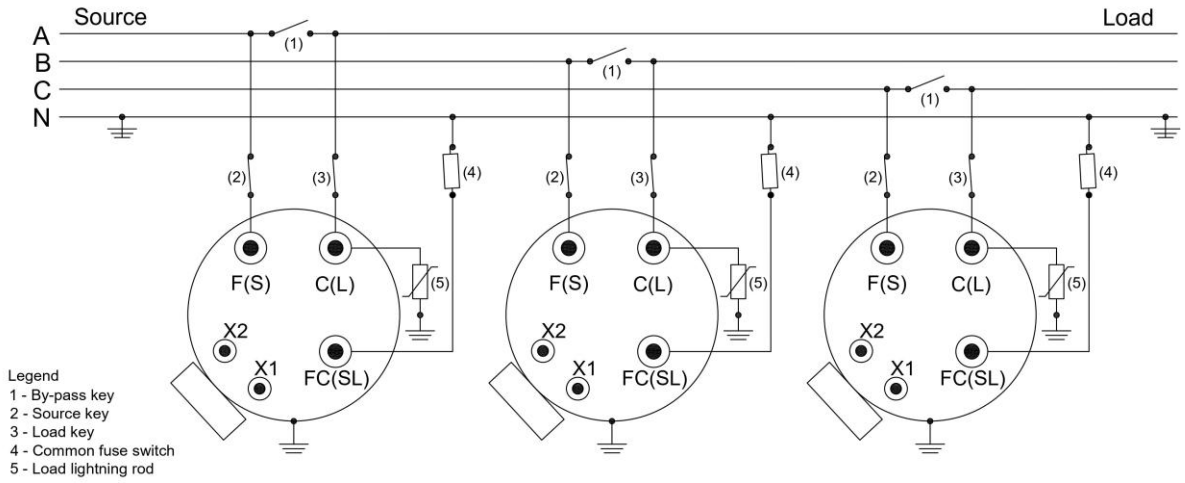

Ground on compensator bank

Adequate grounding for a single-phase reactive compensator bank must ensure ground resistance according to the ABNT® NBR 14039 standard.



DANGER: Do not operate compensator banks with high grounding resistance. The possible potentiation of the carcass or the common terminal (star bank) of the equipment can generate failures in the absorption of atmospheric or transient maneuvering surges, causing damage to the equipment, serious bodily injury and even death.

Fuse Switch

The use of fuse switches in the connection of the common terminals, "FC", of all compensators as recommended in the connection diagrams, ensures that in the event of an internal failure, no damage to the equipment and installation is aggravated and there is no interruption of the power supply.

These fuses must be sized according to the rated reactive power of the compensator.



NOTICE: The compensator is supplied only with the fuse switch holder. The fuse wrench and fuse are not included in the delivery.



DANGER: When the common terminal connection fuse "FC" is open, this terminal will remain at the same voltage as the source terminal, "F", which will also be the same voltage as the load terminal, "C", regardless of the position of the switch. In this case, zero voltage measurement will be observed at the voltmeter terminals and the control will remain off.

Cascading Compensator Bank

We define cascade compensation as the installation, in the same field, of 2 or more banks of compensators. As the source terminals, "F", and load, "C", are rigidly closed internally, without interposition of switches or switches, there is no type of limitation in the cascade installation. It is suggested that, after a fault, the feeder start will have the compensator as a fixed reactive load in the same way as it occurs with the capacitor banks installed in the network, which may mean additional load in the refeed.

Line terminal connections

The connections of the line terminals of the compensators must be made in such a way that the nominal voltage between the terminals of the load (C or L) and the common (FC or SL) does not exceed the nominal value indicated on the identification plate.

The cable connections in the bushings should be tight enough to eliminate any possibility of bad contact and hot spot between terminal and cable.

The cables and terminations must be flexible enough to prevent mechanical forces caused by winds, by the expansion and contraction of networks, cables and terminations, from impacting the terminals of the compensators, since such impacts can damage the porcelain of the insulators because they are very limited in terms of resistance to shocks, shocks and mechanical stress in general. For the same reason, direct connection of mines to the compensator terminals is not permitted without the intermediation of cable holders connecting to the bushings.



CAUTION: During assembly and connection, no mechanical stress can be transmitted to the porcelains and their conductive rods. Such effort can cause loosening of internal connections and ruptures in the sealing and insulation elements, causing poor contact, heating, conductor rupture, insulation rupture, oil leaks and loss of electrical insulation.

Putting it into operation

If the trim is mounted with the switchgear as suggested in section ***Possibilities for system connections*** From this manual, commissioning can be done without interruption of the power supply.

The procedures described below are extremely important to make sure that the compensator is ready to be connected to the system.



CAUTION: The compensator must be in neutral position. Confirmation of the position reading must be made on at least two references, the external position indicator and the neutral light indication on the control. Energizing the compensator outside the neutral position can generate current surges and improper activation of network protections.

To put the compensator into operation, follow the following sequence:

1. From the board data, verify that the control circuit is set to the proper voltage;
2. Set the control system's main switch to the **OFF position**;
3. **CLOSE** the fuse switch that connects the **COMMON TERMINAL (FC or SL)**;
4. Next, **CLOSE** the switch that connects the **SOURCE TERMINAL (F or S**).
5. Set the control system's main switch to the **NORMAL (INTERNAL)** position;
6. Enable **the MANUAL** engine control on the chosen control system. Use the **RAISE** positions buttons to operate the switch two or three steps. Then return the switch to **NEUTRAL POSITION.** When in neutral, check the redundancy of this position: the external indicator will indicate 0 (zero) and the *LED* of the neutral position of the chosen control system will light up;
7. With the trim in the neutral position, set the control system's main switch to the **OFF position**;
8. **CLOSE** the switch that connects the **LOAD TERMINAL (C or L)**;
9. **OPEN** the ***BY-PASS*** key. The compensator will be fully energized;
10. If available, open the current signal short-circuit knife key, see section: ***CT short circuit***;
11. Set the control system's main switch to the **NORMAL (INTERNAL) position;**
12. If the control system is configured, switch to AUTOMATIC operating mode.



NOTICE: STEP 4. Keys that open, in a single operation, the opening of the source, the opening of the load and the closing of the *by-pass*, do not allow this step and the prior confirmation of the neutral position of the compensator without the use of an additional resource.



NOTICE: STEP 5. Due to the risks of a maneuver out of position, Auto Zero, although automatic, must be monitored by the operator, who must observe the sequence of modification of the indication of the positions, checking their ordering and logic. The compensator in a different position implies maneuvering with a load and with greater risks to the equipment, the network and the operators.

Verifying Operation and Compensation

Before closing the key connecting the load terminal (C or L) and opening the load key *by-pass*, as per steps ***8*** and ***9***, respectively, of the ***Putting it into operation***, it is possible to check the operability and compensation of the chosen control system, Proceed:

1. Enable the MANUAL engine control in the control system;
2. Press the **RAISE key** on the electronic control;
3. Note that for each switched shunt there will be a change in the measured power factor with jumps, the higher the larger the shunt to which it has been switched;
4. After the power factor is checked, adjust the control for operation in **AUTOMATIC mode**;



NOTICE: Check the CTR-3X control manual for general details of its functions, settings, and operation.

Withdrawing from operation

The procedures described below are extremely important to make sure that the compensator is ready to be removed from the system. The withdrawal of service can be done without interruption of the power supply.



DANGER: RISK OF EXPLOSION. Before withdrawing from operation, the reactive compensator MUST BE in the NEUTRAL POSITION. Confirmation of the position reading must be made in at least two references, the external position indicator and the indication of the chosen control system. The removal of the service compensator is safer if it is done with the compensator in a neutral position. The compensator in a different position means reactive load opening.

To remove the operation compensator, follow the following sequence:

1. Enable the MANUAL engine control in the control system;
2. Use the LOWER position button to reach the **NEUTRAL POSITION.** When neutral, check the redundancy of this position: the external indicator will indicate 0 (zero) and the *LED* of the neutral position of the chosen control system will light up;
3. Set the control system's main switch to the **OFF position**;
4. If available, close the current signal short-circuit knife key, see section: ***CT short circuit***;
5. **CLOSE** the ***BY-PASS key***;
6. **OPEN** the key that connects the **LOAD TERMINAL (C or L)**;
7. **OPEN** the switch that connects the **SOURCE TERMINAL (F or S)**;
8. **OPEN** the fuse switch that connects the **COMMON TERMINAL (FC or SL).**



CAUTION: STEP 2. Due to the risks of a maneuver out of position, Auto Zero, although automatic, must be monitored by the operator, who must observe the sequence of modification of the indication of the positions, checking their ordering and logic. The compensator in a different position implies a maneuver with a load and with greater risks to the equipment, the network and the operators

CONSTRUCTION DETAILS AND CONNECTIONS

The CAQ-1 reactive compensators from ITB Equipamentos Elétricos Ltda. were designed to be partially or completely removed from the interior of the tank without the need for electrical disconnections, facilitating their maintenance. See the section: ***Removing the active part of the tank.***

The main winding and transition reactor assembly have *a shell type* assembly. The parallel winding is connected to the load side.

Winding Connection Diagram

The Figure 14 details the standard circuit of a CAQ-1 compensator.

Figure 14: Winding connection diagram – CAQ-1 compensator.

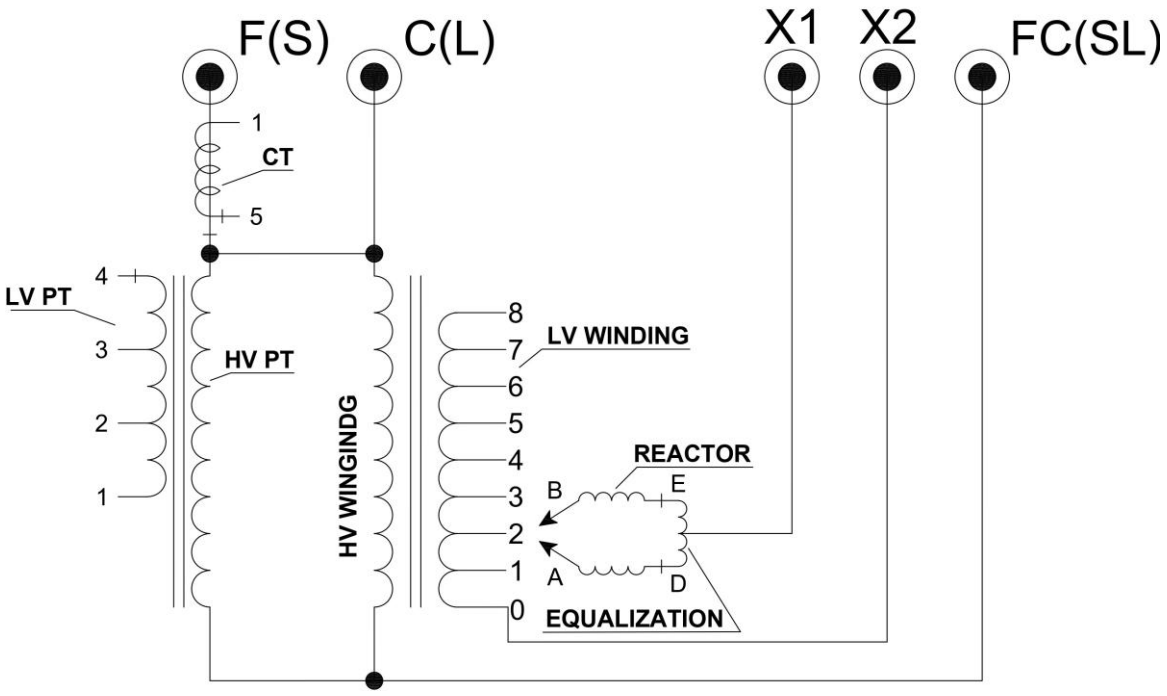

Internal arrangement of components

The internal construction of the compensator is made in a unitary way, where all components are fixed directly to the main cover of the compensator. This method of construction makes it easy to manufacture and maintain. The breakdown of the arrangement of each internal component can be seen in the Figure 15 and in the Table 6.

NOTICE: The following breakdown is not intended to cover all possibilities for internal construction of a reactive compensator. Details intrinsic to each project should be consulted during the technical feasibility analysis and purchase order approval phase.

Figure 15: CAQ-1 compensator internal components.

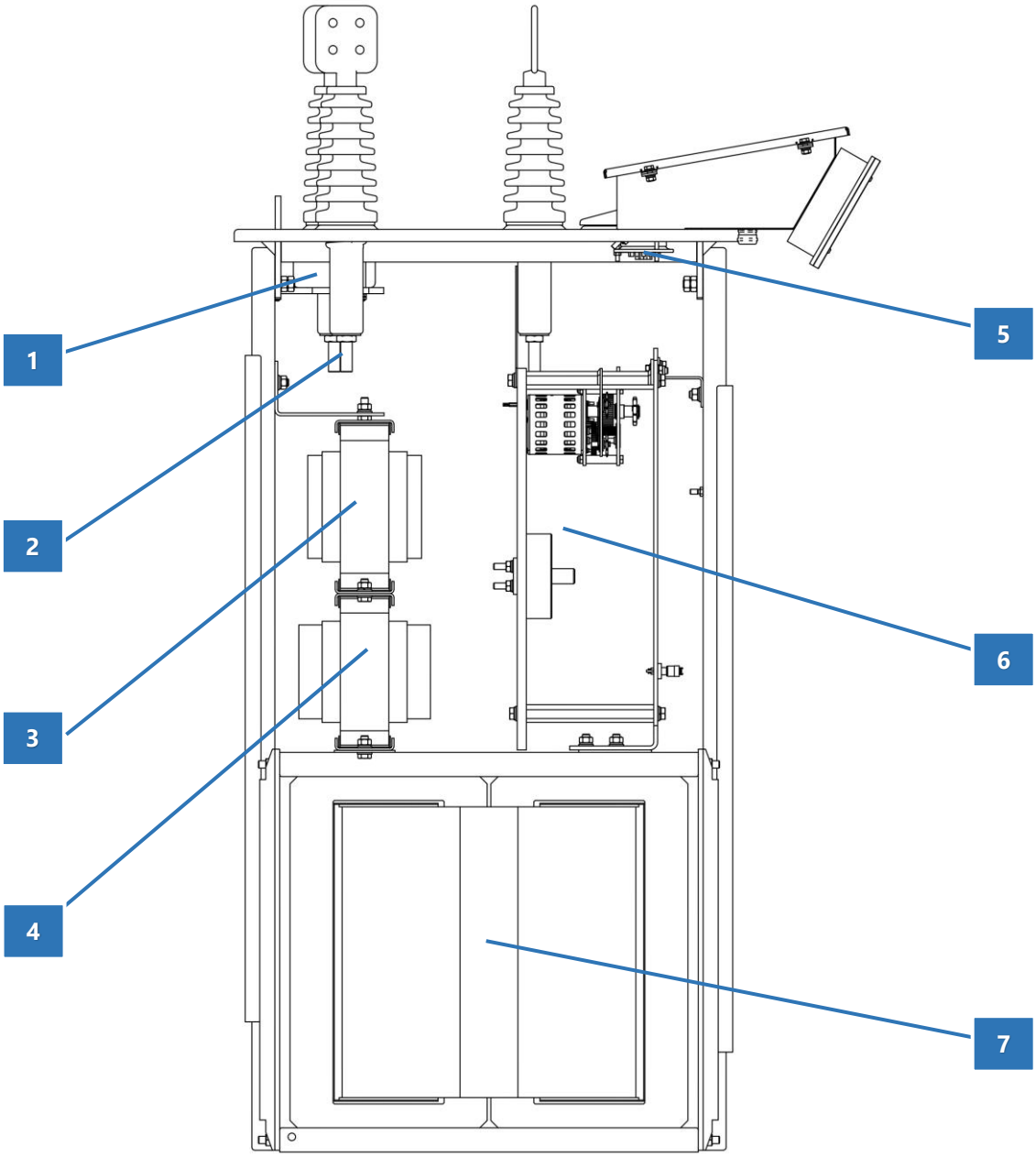

Table 6: CAQ-1 compensator internal components.

Item	Description
1	Current Transformer (CT)
2	Connection terminals of the dowels
3	High Voltage to Low Voltage Potential Transformer
4	Transition reactor
5	Control Signals Passover Terminal Block
6	Load changer
7	Main Winding (High Voltage Winding, Low Voltage Winding, Equalization)

Standardized internal wiring diagram

As shown by item 4 of the Table 6, by default, all CAQ-1 reactive compensators have a pass-through terminal block for the control system signals on their cover. This block has a body made of insulating material, resistant to pressure and working temperature, the passage terminals are made of brass. The standardized details of your connection to the internal wiring are displayed according to the Figure 16.

NOTICE: The following detail is not intended to cover all possibilities for internal wiring of a reactive compensator. Details intrinsic to each project should be consulted during the technical feasibility analysis and purchase order approval phase.

Figure 16A: Standardized internal wiring diagram.

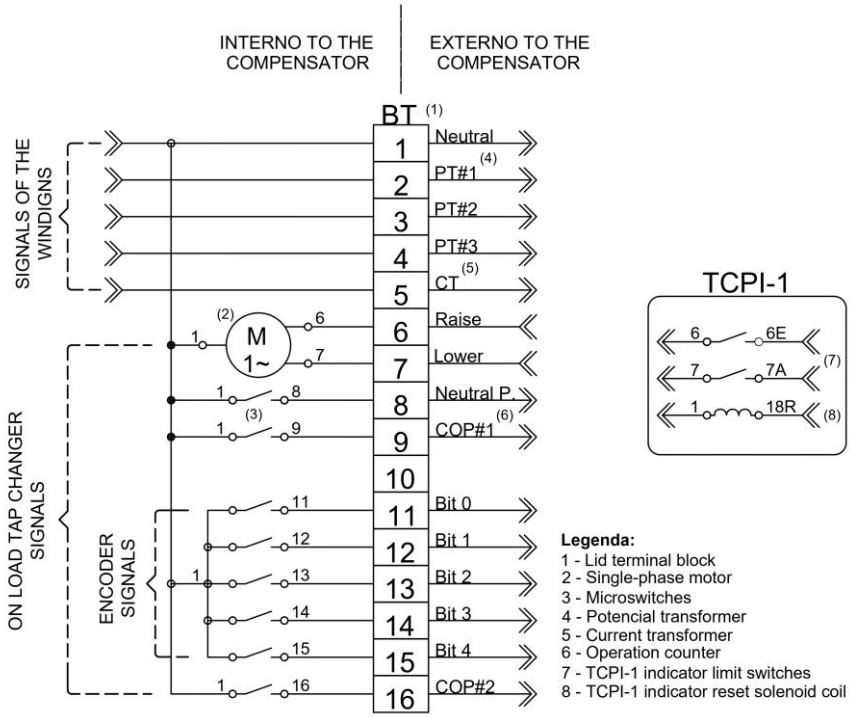

Windings

All CAQ-1 reactive compensators have at least three sets of independent windings, as follows:

1. A larger set, arranged at the bottom of the compensator the winding of high and low voltage and equalization;
2. A winding fixed on top of the main winding which is the transition reactor;
3. A high-voltage to low-voltage potential transformer (TP), fixed over the reactor
4. A toroidal winding, fixed over the TP or at the bottom of the compensator cover, which is the current transformer (TC).

Each of these windings is constructed and interconnected according to specific design characteristics, which may vary depending on its application and conditions of use.

Tap-chargers

ITB Equipamentos Elétricos Ltda. has a wide range of on-load switchgear, which are manufactured and tested according to ABNT® NBR 8667 and IEEE Std C57.131 [TM standards].

The switchgear used in each project is defined by the voltage and current rating of the required compensator.

PREVENTIVE MAINTENANCE

The reactive compensator is designed to allow some check items to be performed without the need to take it out of operation. Maintenance, methodically followed, is an indispensable factor for the long life of the compensator, in the best operating conditions and performance.

Periodic inspections and maintenance

We recommend that maintenance be carried out periodically, in order to extend the useful life of the equipment. The Table 7 and Table 8 recommend the periodicities (in years), checkpoints, procedures and corrections necessary for the control and for the accessories of the compensator, respectively. However, the period for these inspections may vary, according to the experiences accumulated by the user.

Table 7: Periodic maintenance for the control of the compensator.

Period	Checkpoints	Procedure or Check Item	Correction
1	Drive; manual and maximum and minimum lock	1. Adjust the position lock and operate the compensator in the direction of lifting, check whether the control raises the position, stopping at the set lock; 2. Adjust the position lock and operate the compensator in the lowering direction, check that the control lowers the position until it reaches the neutral position.	Remove the service control and send it for service
1	Reference voltage	With the compensator energized, adjust: VR = 0V, Ux = 0V and insensitivity at 1V. Check if the output voltage of "Voltmeter" is equal (1V) to the reference after stabilization.	Remove the service control and send it for service
1	Timing; Automatic lifting and lowering actuation	1. Vary the reference voltage value to a voltage greater than the mains voltage: Check that the motor activates in the direction of RAISE after the end of the set time; 2. Vary the reference voltage value to a voltage lower than the mains voltage: Check that the motor starts in the direction of LOWER after the set time has elapsed.	Remove the service control and send it for service.



NOTICE: If the trim does not operate satisfactorily, a replenishment control can be tested before removing the trim from service.

Table 8: Periodic maintenance for accessories.

Period	Checkpoints	Procedure or Check Item	Correction
1	Bushings and terminals	1. Crack in porcelain; 2. Accumulation of impurities in porcelain; 3. Oil leakage; 4. Thermal inspection of terminals.	1. Replace the bushing; 2. Wipe with a cloth that contains ammonia or carbon tetrachloride and apply a neutralizer; 3. Retighten the joints, or replace the bushing; 4. In case of excessive heating, retighten the terminals when they are loose.
1	Lightning rod	1. Agglomeration of impurities; 2. Thermal inspection.	1. Wash with fresh water and dry with dry cloth; 2. In case of excessive heating of the terminals, proceed with retightening when they are loose. In case of chain driving, replace the lightning rod.
1	Oil level indicator	1. Crack in the glass window; 2. Oil leakage.	1. Change the display glass; 2. Retighten the gaskets, or replace the display.
1	Drain valve	1. Oil leakage.	1. Retighten or replace the drain valve.



DANGER: For the safety of the operation, the checks presented by the Table 8 must be carried out when the equipment is out of operation. Use appropriate PPE and prevent leaks into the environment.



NOTICE: If repairs cannot be performed in the field, remove the service compensator and send it for service.

Insulating mineral oil is used in the compensator to serve two basic functions, insulation and cooling. Monitoring and maintaining oil quality is essential to ensure reliable operation throughout the life of the compensator.

In view of this, we recommend the need for field trials, as presented by the Table 9. The assays were typically chosen to obtain a quick estimate of the oil condition and to eliminate any possibility of alteration of the sample due to transport for external testing.

The Table 10 Provides limit values for oil in compensators in use.

Table 9: Periodic maintenance for insulating oil.

Period	Checkpoints	Procedure or Check Item	Correction
1	Sample the insulating oil	Physicochemical test: 1. Appearance; 2. Dielectric strength; 3. Water content; 4. Loss factor; 5. Neutralization index; 6. Interfacial tension; 7. Flash point; 8. Sediments.	Remove the service compensator and send it for maintenance if the values found are out of those presented by the Table 10.



NOTICE: The sample taken must have a volume representative of the oil contained in the equipment. Careful sampling procedures or contamination in the sample container can lead to erroneous conclusions about oil quality.

Table 10: Limit values for mineral oil in use.

Tests	Test Method	Acceptance Criteria
Appearance	Visual	Clear, free of suspended materials
Dielectric strength, kV, cap electrode	ABNT® NBR IEC 60156	≥55
Water content, mg/kg	ABNT® NBR 10710	≤40
Loss factor, % at 25 °C at 90 °C at 100 °C	ABNT® NBR12133	 ≤0.5 ≤15 ≤20
Neutralization index mg KOH/g	ABNT® NBR 14248	≤0.20
Interfacial tension, at 25 °C, mN/m	ABNT® NBR 6234	≥20
Flash Point, °C	ABNT® NBR 11341	≥130
Sediments	ABNT® NBR 10576	No precipitable sediment or sludge is to be detected. Results of less than 0.02% by mass should be disregarded

Removing the active part of the tank

The instructions for the safe removal of the active part of the compensator from the interior of the tank are listed by the following procedure:

1. Remove the service compensator, following the safety instructions as presented by section: ***Withdrawing from operation***;
2. Place the compensator in a position where the energized mains cannot interfere. It is recommended that the equipment be taken to a maintenance workshop, or some covered place, free of high humidity, with a flat and level floor;
3. Wait until the temperature of the insulating oil is lower than 40ºC;
4. Remove the screws that secure the chosen control system to the main tank;
5. Remove the grounding conductor connected between the control box and the compensator tank;
6. Remove the conductors from the X1 and X2 terminals of the cover connection bushings;
7. Remove the screws that secure the lid to the tank;
8. Remove the grounding conductor connected between the cover and the compensator tank;
9. Be careful not to damage any device that may be installed in the tank during the removal of the active part;
10. Suspend the active part through the lid eyelets, guiding the control box or auxiliary box that will be lifted with the lid.



CAUTION: STEP 9. Before removing the active part from the inside of the tank, compensators that have a thermometer, oil level with contacts, or any other accessory that accesses the interior of the compensator, the following procedure must be done: 1) remove the insulating oil until its level is below the minimum marking on the level indicator device and then 2) remove the accessories. Failure to follow these instructions will cause the devices to break, resulting in oil leakage.



CAUTION: STEP 10. Do not rely on the active part lifting device for inspection and maintenance. Place a wedge between the lid and the tank to prevent the lid from descending with the active part, causing equipment damage, serious bodily injury, and even death.



CAUTION: STEP 10. Do not suspend the control box using its interconnecting cable with the compensator. The cable is not designed for such operation and may break, causing damage to equipment, serious bodily injury, and even death.



NOTICE: STEP 10. By opening the compensator, there will be the possibility of human and environmental contact with the insulating oil. Use appropriate PPE and prevent leaks into the environment.

Replacing the active part in the tank

After the services have been performed, the replacement of the active part inside the compensator tank must follow the following procedure:

1. If the active part is out of the oil for more than two hours, dry it before proceeding;
2. Make sure the integrity of the insulation and tightness of all terminals of the active part;
3. Clean the gasket and position it on the flap of the tank;
4. Suspend the active part with the lid above the height of the tank;
5. Align the side supports of the active part, fixed to the lid, with the guides inside the tank.
6. Proceed with lowering the unit. Note that there will be a gap between the lid and the tank, even with the seating of the active part at the bottom of the tank;
7. Place the lid over the tank and secure all the sealing screws of the assembly;
8. Fix the grounding conductor connected between the cover and the compensator tank;
9. Fix the screws that secure the chosen control system to the main tank;
10. Fix the grounding conductor connected between the control box or auxiliary box and the compensator tank;
11. Reconnect the conductors to the X1 and X2 terminals of the cover, responsible for powering the reactive element;
12. Proceed with dielectric, electrical, and functional testing.



CAUTION STEP 1. Make sure that when drying the active part the temperature does not reach marks higher than 90°C.



NOTICE: STEP 6. If necessary, before fixing the cap screws, use a rubber hammer to help accommodate the cap on the tank, in order to avoid possible leaks.



CAUTION: If a new oil filling is necessary, it is recommended that after this process, the vacuum procedure be carried out on the equipment, for at least one hour and at least 100 mmHG. If the vacuum process is not possible, do not energize the compensator until seven days after filling.

Load changer

The on-load tap changer is a simple device with a long service life, provided that the maintenance recommended by the Table 11, are followed.

Table 11: Inspections the changer under load.

Frequency – Number of operations	Recommended Action
125.000	1. Contact resistance measurement (2,500 μΩ max); 2. Visual inspection; 3. Wear analysis of fixed and mobile contacts.
250.000	1. Replacement of fixed and mobile contacts; 2. Verification of the operation mechanism.
1.000.000	1. Overhaul, disassembly and replacement of wearing parts.

Resistance measurement test

The measurement of the contact resistance must be carried out by connecting the terminals of the microhmmeter between the terminals of the shaft and the slip ring, the most central tie rods of the commutator insulating plate, identified by the letters A and B. In this condition, the resistance will be given by the association of the fixed contact of the current position, the moving contact, the shaft and the slip ring. Measurements should be performed in all even positions.

For new switches, the measured values may not exceed 800 μΩ. Due to the natural wear of the contacts, misalignments and clearances of the mechanisms gradually increase this resistance, let us consider the value of 2,500 μΩ as the maximum acceptable limit for switches in operation.

Checkpoints

When carrying out periodic inspections of the on-load changers, we recommend that the following points are always checked:

1. All nuts acting on brass tie rods must be tightened and have the torque conferred with 1.2 kgf.m;
2. The drive chain of the main system and the mechanical indication system, must have a minimum clearance of 15 mm and a maximum of 25 mm, proceed:
    - Pull the current in the direction of lowering (do not end the switching);
    - Check the gap in the upper center of the chain between the chainring and the sprocket;
    - If the clearance is not between 15 to 25mm (full range), adjust the position of the motor or indicator output.
3. The rotor of the ENCODER or STCMS must be synchronized with the moving contacts in such a way that, in the nominal position, none of its contacts are closed, use the reference engraved on the circuit board for such adjustment;
4. Test the mechanical locks, position +16, with the motor energized at 140 VAC;

Estimated lifespan of contacts

You can determine a projection of the life cycle of the switch contacts depending on the nominal load and operating quantities.

This estimate, presented by the Table 12 is based on CAQ-1 compensators with on-load changers manufactured by ITB Equipamentos Elétricos Ltda.

Table 12: Expected lifespan of contacts.

Upload % In	Number of Estimated Operations		
	Mobile Contact	Fixed Contact [Unit]	Fixed Contact [Set]
160	125.000	13.900	125.000
135	177.100	19.700	177.000
120	208.400	23.150	208.500
110	229.200	25.500	230.000
100	250.000	27.800	250.000
90	250.000	37.100	334.000
80	250.000	46.300	417.000
70	250.000	55.600	500.000
60	250.000	64.900	584.000
50	250.000	74.100	666.700
40	250.000	83.400	750.000
30	250.000	92.600	833.400
20	250.000	101.900	916.700
10	250.000	110.000	1.000.0000



NOTICE: Due to mechanical fatigue of the compression springs of the moving contact, the replacement of this contact must be carried out with a maximum of 250,000 operations.



NOTICE: The life expectancy of the contacts, as presented by the Table 12, does not exclude or limit the user's responsibility to carry out the preventive maintenance described in this instruction manual.

The Figure 17 illustrates the projection of wear verified on fixed contacts in mobile over the life of the changer under load.

Figure 17: Contact wear.

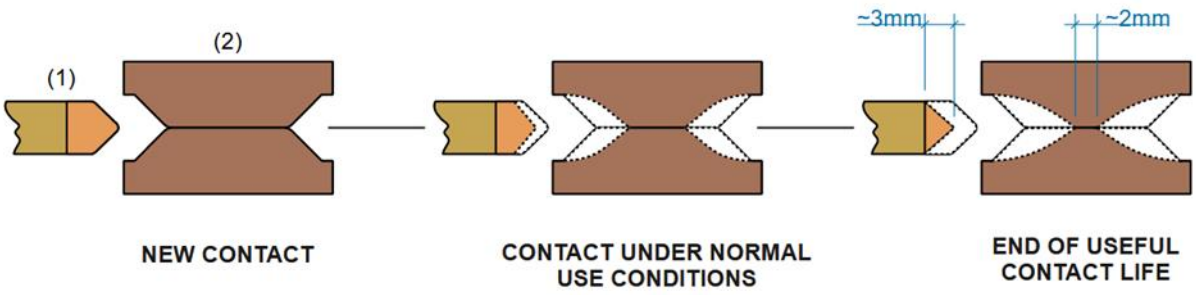

LEGEND:
1 - Fixed contact
2 - Mobile contact

SPARE PARTS FOR REPLACEMENT

ITB Equipamentos Elétricos Ltda. is available to supply spare parts for all its equipment. This request can be made by calling **+55 (18) 3643-8000**, or by e-mail **vendas@itb.ind.br**. For this, if possible, have at hand the ITB code and the description of the component must be informed at the time of purchase.

The complete list of components and accessories is divided into three parts: Commutator, Motor and Compensator. The following breakdowns are broken down by item, description, ITB material code, and their respective technical drawings (where applicable).

Life cycle

ITB Equipamentos Elétricos Ltda. undertakes to receive and dispose of the equipment produced by it when it is considered unusable, in accordance with current legislation.

Insulating oil – MSDS

Reactive compensators, like many high-voltage electrical devices, have an active part surrounded by insulating oil and refrigerant. Therefore, they are mounted in airtight tanks with pressure relief devices. In operation, this oil can reach high temperatures and, even at room temperature, it is an agent that can be polluting and aggressive.

We recommend reading the Chemical Product Safety Data Sheet – MSDS, which contains all the necessary information for safe handling, proper disposal, associated risks and measures in case of accidents.

ITB is available for clarification and additional information. ITB reserves the right to revise and update this manual without prior notice. It is not allowed to use the registered trademark ITB Equipamentos Elétricos Ltda. without its prior consent.
The SEL products referenced in this document are the property of Schweitzer Engineering Laboratories, Inc.
Microsoft® Windows are registered trademarks of Microsoft Corporation® in the United States and/or other countries.
IEEE Std C57.15™ is a registered trademark of the Institute of Electrical and Electronics Engineers, Inc. This product is not endorsed or approved by the IEEE.®
ABNT® is a registered trademark of the Brazilian Association of Technical Standards, all rights reserved.

ITB EQUIPAMENTOS ELÉTRICOS LTDA.
Rua Devanir Terence, 161 | Raif Mehana Rahal Industrial Park
Birigui - SP | Zip Code: 16206-012
Phone: +55 (18) 3643-8000 | Fax: +55 (18) 3643-8016
www.itb.ind.br | vendas@itb.ind.br
©2025 ITB Equipamentos Elétricos Ltda. All rights reserved.

EQUIPAMENTOS ELÉTRICOS